SÝKORA sportswear

SÝKORA sportswear
info@dt-sport.com
+61 412 482 330
www.dt-sport.com

Project:

Date:

Colors:

Designed by:

100 mm scale

CAP

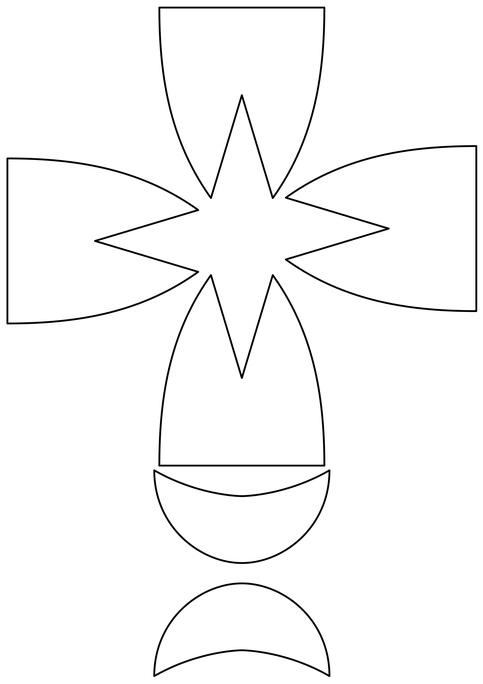

GLOVES

XS - XL - XXL

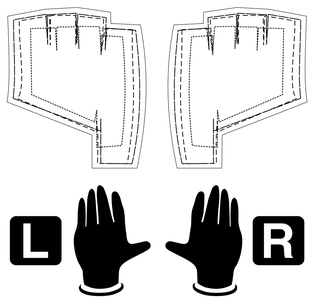

HEAD SCARF

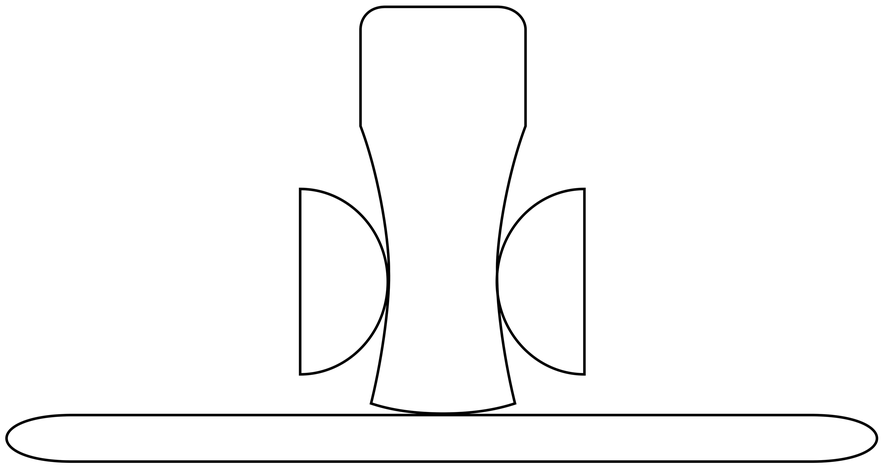

HEAD BAND

WINTER CAP

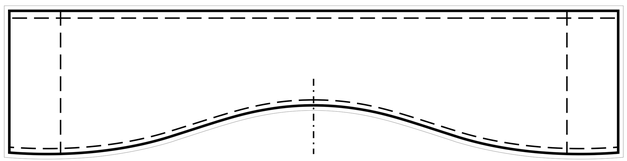

SHOE COVERS

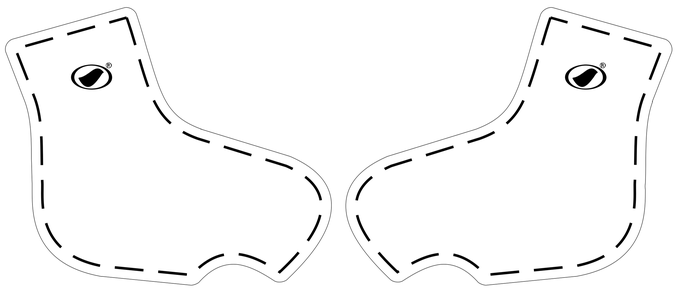

LOGOS

1
2
3
4
5
6
7
8
9
10

D&T SPORT
YOUR CYCLING ALTERNATIVE
www.dt-sport.com